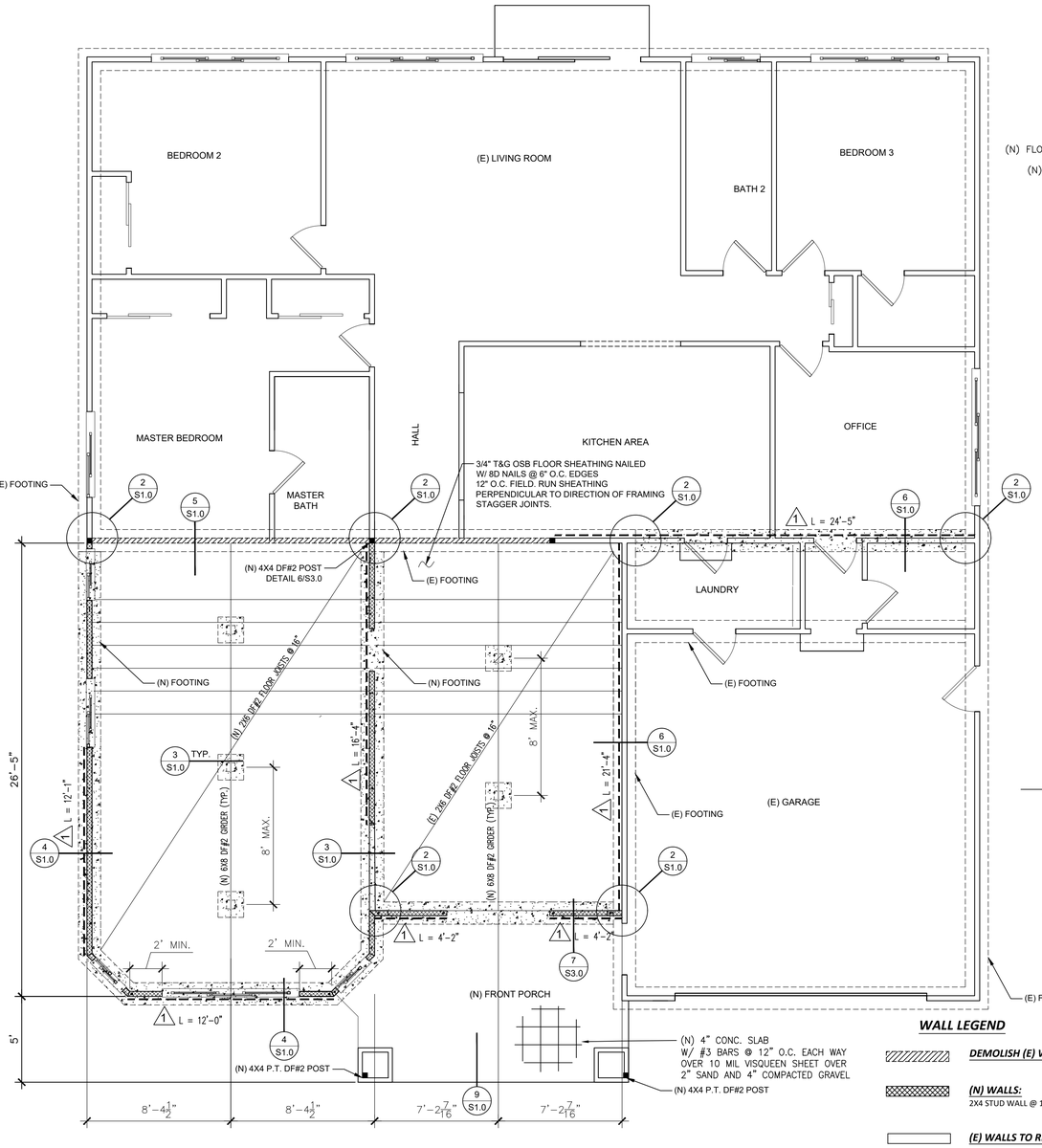

NOTES: 1. (N) WALLS SHALL BE PER TYPICAL FRAMING PER DETAIL 8/S1.0
2. SHEAR WALLS PER SHEAR WALL SCHEDULE ON SHEET S3.0

01 FOUNDATIN PLAN
S1.0 SCALE:1/4":1'

WALL LEGEND

- ***DEMOLISH (E) WALLS:***
- ***(N) WALLS:*** 2X4 STUD WALL @ 16" O.C.
- ***(E) WALLS TO REMAIN (NO CHANGE)***

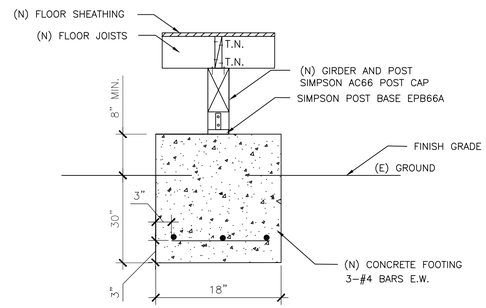

03 (N) PIER FOOTING
NTS

DETAIL NOTES:
1. ALL SILL PLATE ANCHOR BOLTS, NUTS AND WASHERS SHALL BE HOT DIPPED ZINC COATED GALVANIZED STEEL, STAINLESS STEEL OR MECHANICALLY DEPOSITED ZINC COATED STEEL.
2. ALL SILL PLATE ANCHOR BOLTS SHALL HAVE 3" SQUARE X 0.229" THICK PLATE WASHER.

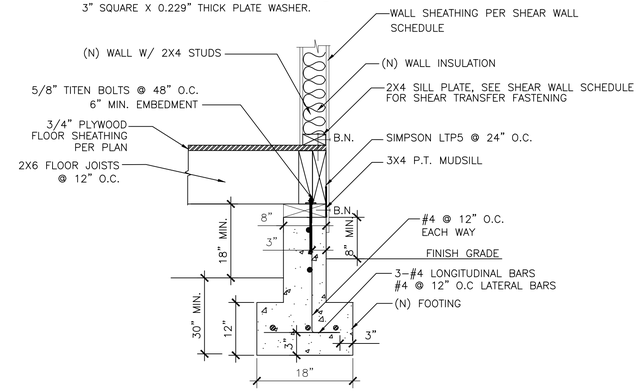

04 (N) FOOTING AND FLOOR DETAIL
NTS

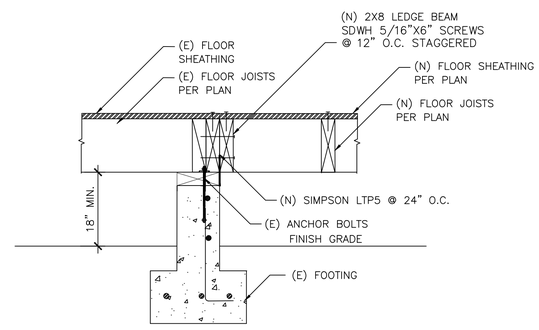

05 (N) FLOOR TO (E) FLOOR DETAIL
NTS

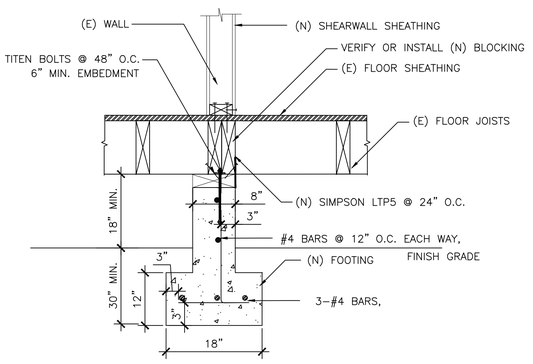

06 (N) WALL FOOTING DETAIL
NTS

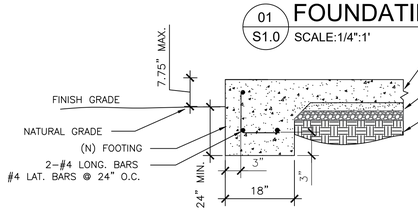

09 SLAB DETAIL
NTS

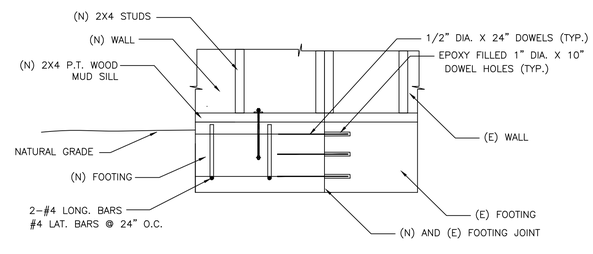

NOTE: SPECIAL INSPECTION REQUIRED FOR DOWEL INSTALLATION INTO EXISTING CONCRETE

02 (N) FOOTING TO (E) FOOTING CONNECTION DETAIL
NTS

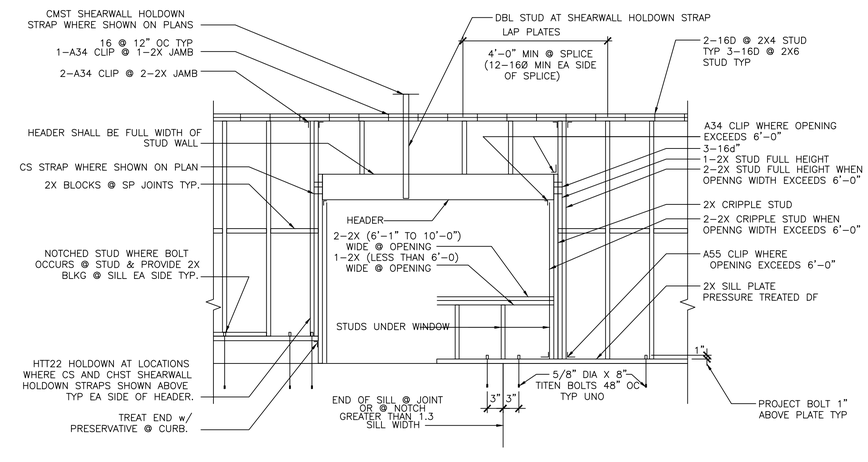

08 TYPICAL FRAMING DETAILS
NTS

1 NO-CHANGE

CONSULTANT

PRADO ENGINEERING
3505 GLENWOOD DR.
FAIRFIELD CA 94533
TEL. (415) 889-0878

SEAL

REGISTERED PROFESSIONAL ENGINEER ALAN VIOR PRADO No. 066562 Exp. 6/30/20 CIVIL STATE OF CALIFORNIA

PROJECT TITLE

MR & MRS SHRIVASTAVA ADDITION

APN #: 501-752-15

ADDRESS
4188 EGGERS DR.
FREMONT CA 94536

OWNER
MR & MRS SHRIVASTAVA

ADDRESS
4188 EGGERS DR.
FREMONT CA 94536

INFO REVISIONS

#	DATE	DESCRIPTION
1	06/05/2020	PER COMMENTS DATED 02/03/2020

DATE:

DRAWN BY :	JLV
CHECKED BY :	JLV, ABP
DATE :	10/26/2019

APPROVED BY OWNER:

PHASE : 000%

SHEET #

S1.0

JOB NUMBER : 13032

WRITTEN DIMENSIONS ON THESE DRAWINGS SHALL HAVE PRECEDENCE OVER SCALED DIMENSIONS. CONTRACTOR SHALL VERIFY AND BE RESPONSIBLE FOR ALL DIMENSIONS AND CONDITIONS ON THE JOB. THE ENGINEER MUST BE NOTIFIED IMMEDIATELY IN WRITING OF ANY VARIATION FROM THE DIMENSIONS AND CONDITIONS SHOWN ON THESE DRAWINGS. FIELD VERIFY ALL CONDITIONS PRIOR TO LAYING OUT OR FABRICATING ASSOCIATED WORK. BRING TO THE ENGINEER'S ATTENTION ANY DEVIATION FROM DESIGNED CONDITIONS AND FIELD CONDITIONS PRIOR TO ASSEMBLING MATERIALS AND INSTALLING WORK, AND CONTINUE WITH THE OWNER TO MODIFY, BUT CONDITIONS AT NO ADDITIONAL COST TO THE OWNER. ENGINEER OR ENGINEER'S CONSULTANTS AND DETAILS MUST BE SUBMITTED TO THE ENGINEER'S OFFICE AND REVIEWED BY THE ARCHITECT PRIOR TO ORDERING MATERIALS, FABRICATION AND CONSTRUCTION. ENGINEER'S CONSULTANTS TO BE RESPONSIBLE FOR THEIR DESIGNS AND DRAWINGS. ALL DRAWINGS, SPECIFICATIONS AND MODELS, AS INSTRUMENTS OF SERVICE, ARE AND SHALL REMAIN THE PROPERTY OF THE ENGINEER WHO PREPARED THEM. THEY ARE TO BE RETURNED UPON REQUEST AT COMPLETION OF THE PROJECT. THEY MAY BE REPRODUCED ONLY WITH THE WRITTEN PERMISSION AND FOR THE USE OF THE ENGINEER WHO PREPARED THEM. THEY MAY NOT BE REPRODUCED OR GIVEN TO THIRD PARTIES WITHOUT THE WRITTEN PERMISSION OF THE ENGINEER WHO PREPARED THEM. THE ENGINEER'S SEAL, TITLE BLOCK, OR THE SIGNATURE, TOGETHER WITH